CONTENTS

A. Operating instructions:

I. Telephony A3

1. Start the transmitter by setting the FUNCTION SWITCH to either SIMPLEX or DUPLEX.
2. Set the CHANNEL SELECTOR to the desired frequency.
3. Set the toggle switch S3 (REDUCED – FULL POWER) to the desired output.
4. Press the telephone handset switch (however allowing 30 seconds after the setting of the FUNCTION SWITCH), and set AERIAL TUNING for max. deflection on the aerial meter.
   On both SIMPLEX and DUPLEX operation the transmitter will not be operative until the telephone handset switch is pressed.

II. Amplifier (Hailer)

If you want to use the transmitter amplifier system for aboard messages or for hailing of another vessel, turn the FUNCTION SWITCH to position HAILER, and the system is ready at once without any warming-up time. The opreation is initiated by your pressing the telephone handset switch.

NB.: When replacing fuses turn the FUNCTION SWITCH to position OFF, and unscrew the 3 milled nuts in the fusecover. Extra fuses are at the back of the fusecover. Do not touch the aerial stand off, while the transmitter is in operation, as high RF-voltage will cause severe burns.

B. Installation:

I. Preparation

Before installation please ascertain that the transmitter is set up to the correct voltage supply line of the vessel, 12 or 24 Volt. Insert the desired crystals and trim the transmitter as specified under C.

II. Fastening of transmitter

To take the transmitter out of the box remove the 4 screws marked on the front panel of the transmitter. Then pull out the transmitter. Once the transmitter has been pulled out, loosen the connector at the bottom of the transmitter, remove earth connection by unscrewing a screw at the right side of the transmitter, and remove the two power lines by unscrewing two screws in the terminal row mounted inside the transmitter box.

Finally remove the cord in the fastening plate, after which the transmitter can be removed from the cabinet.

The box can now be fastened to the bulkhead by means of 4 pcs. 1/4' (6MG) throughbolts, through the bottom of the box.

The transmitter must be mounted so that there is at least a clearance of 25 mm under it. There is a dimensional sketch of the transmitter at the end of this book (fig. 14).

III. Aerial

The transmitter aerial used must be either a wire aerial of 10-20 m length or a whip aerial of minimum 5 m, and the aerial must be placed as high and as much in the clear as possible. Joints should be made by soldering or with reliable cable clamps. For the aerial good insulators must be used at both ends. The downlead of the transmitter aerial is normally not screened, but if need be, a coaxial cable of up to 4 m and of good quality (50-75 Ohm, for instance RG8-U) may be used for the purpose. The transmitter aerial is connected to the stand-off insulator marked AERIAL at the front-panel of the transmitter. If coaxial cable is used, the screening braid of the cable must be earthed at the transmitter end.

IV. Earth connection

The earth connection is to be connected to the terminal at the bottom of the cabinet. For earth connection use copper band of minimum 0,5×50 mm, which in vessels of iron must be bonded to the hull of the vessel, and in wooden vessels to a metal plate of *at least* 1 m² at the outer side of the hull below the water line. In sailing vessels with external ballast keel, the earth band can be connected to a keel bolt, and the keel of the vessel act as »earth«.

In order to obtain the best duplex communication, it will often be necessary to lead a separate earth wire – 2,5 mm² insulated cable – from earth plate to receiver.

V. Connection to the mains of the vessel

To the terminal block marked POWER at the bottom of the transmitter cabinet the mains of the vessel is connected (12 or 24 V DC).

The supply lines must be as short as possible and must go directly to the battery of the vessel. A cable of at least 16 mm² should be used for 12 V DC, and for 24 V DC a cable of at least 10 mm² should be used.

VI. Other connections

Apart from the telephone handset, which is connected to the plug TELEPHONE HANDSET on the front plate, the other connections are in a terminal block with 16 terminals mounted in the transmitter cabinet.

The receiver aerial must always be led through the transmitter in order to be switched by the relay of the transmitter and the switch S5 (FUNCTION SWITCH).

The receiver aerial is led in a coaxial cable to the terminals DUPLEX AERIAL and SCREEN, the interconnection cable to the receiver is connected to the terminals marked AERIAL TO REC. and SCREEN.

If the receiver to be used in combination with the transmitter is not equipped with blocking relay (46T, 66T, 46TD, 56TD), the loudspeaker for the receiver is led through the transmitter for switching. It is connnected to the terminals marked LOUDSPEAKER and COMMON, and the interconnection cable is connected to the terminals marked LF FROM REC. and COMMON.

However, if the receiver is equipped with blocking relay (56T), it will not be necessary to lead the loudspeaker cable through the transmitter. The terminal of the receiver marked COMMON and LOUDSPEAKER ON/OFF is connected to the terminal of the transmitter marked EXTERNAL REPLAY.

To the terminals marked HAILER loudspeakers aboard the vessel or possibly loudhailers may be connected. Impedance 12 Ohm; 30 W.

NB.: The transmitter must only be connected to the voltage, for which it is set up.

VII. Adjustment of coupling and aerial tuning

When the transmitter has been installed, the coupling and the aerial tuning must be adjusted on all crystal frequencies. The adjustment is made by means of the accompanying tool by screwing the accompanying Nylon screws into the drum and thus activating the contacts. Contacts 24-33, both included, select the necessary coupling capacity and aerial tuning inductance.

This is the procedure to be followed:

1. Switch on transmitter.
2. Select frequency.
3. Put screws into the contacts 26-33.
4. Turn AERIAL TUNING knob, until the aerial current meter AERIAL CURRENT shows max. deflection. If there is no max. deflection, put a screw into either 30-31 or 32.
5. Turn the TEST SWITCH knob to position Ik and take reading of the cathode-current of the P.A.-stage on the TEST METER. By moving the screw in the contact 26 to one of the contacts 24-29, both included, the deflection of the meter is brought below the red line of the scale, but as close to it as possible.

With very long and very short aerials it may sometimes be difficult to obtain optimum adjustment of the aerial coupling and tuning. The forrowing procedure should then be carried out.

Aerial Coupling

If the cathode curent cannot be brought near to the red line of the scale by putting the screw into the contacts 24-29, this is due to the fact that the coupling impedance is lower than the aerial impedance. This can be remedied by moving the wires between the coupling capacitor and the contacts 24-29 some stages up on the coupling capacitor. The wires are from the factory soldered on to the coupling capacitors, which match the aerials in general use (see fig. 2).

Aerial tuning

If maximum deflection cannot be obtained on the meter by means of that mentioned under point 4, a suitable capacitor must be inserted in series with the aerial. The screw in the contact 33 must be removed. The same procedure as mentioned under point 4 is followed. By this it should be made possible to obtain max. deflection on the meter (see fig. 2).

NB.: Adjustment of coupling and aerial tuning is made with the working voltage of the vessel on the transmitter. The dynamo of the vessel must be running.

VIII. Batteries of the vessel

The following battery sizes are recommended:

12 Volt:	180 Amp H
24 Volt:	90 Amp H

IX. Consumption of transmitter

Supply voltage	12 Volt	24 Volt
Stand by (listening SIMPLEX)	2 Amp	1,4 Amp
Unmodulated carrier wave (listening DUPLEX)	20 Amp	12 Amp
Modulated carrier wave (speech)	26 Amp	15 Amp

C. Tuning

The transmitter is so constructed that two neighbouring channels (channels, which are on the same line on the frequency board of the transmitter, for instance channel 15 and channel 31) have the same P.A.-tuning.
The channelnumbers (1-32) and the corresponding P.A.-tuning (A-Q) are indicated opposite to each crystal holder on the crystal panel.
The letters (A-Q) referring to the P.A.-tuning are also printed on the channel selector drum (see fig. 2 and 3 at the back of this book).
When inserting a new crystal please ascertain in advance, whether the transmitter has already been tuned up for a frequency, which differs less than 10 Kc from that of the crystal. In that case, and if the neighbour-channel is free, place the new crystal in the crystal holder of the neighbouring channel, and no further tuning will be necessary. If there is no neighbouring channel free, the following must be observed:

1. Choose the channel number, which the crystal is going to have, and put the crystal into the crystal holder concerned on the crystal panel, at the same time note what row of thread holes on the channel selector drum correspond to the crystal holder (same letter printed opposite to crystal and opposite to row).
2. Set the toggle switch on REDUCED POWER.
3. Set the TEST SWITCH knob to position Ik.
4. Dismount aerial.
5. Start the transmitter.
6. Put the accompanying Nylon screws into the contact numbers 1-2 and 22-23 as shown in the below diagram.
7. Depress contact 19 by means of a trimming stick.
8. Depress by means of another trimming stick the contacts from 3 and upwards, until the TEST METER shows minimum deflection.
9. Hold the contact found under 8 depressed and move the trimming stick from the contact 19 to that of the contacts 17-21, which gives the minimum deflection on the TEST METER.
10. Stop the transmitter.
11. Put screws into the holes of the channel selector drum corresponding to the selected channel letter and the contact numbers found according to the procedure specified above.
12. Set the toggle switch on FULL POWER.
13. Start the transmitter on the trimmed-up channel.
14. The deflection on the TEST METER must now be 85-130 mA. – It will often be necessary to insert a further screw between the 2 screws earlier found, in order that the deflection on the meter may be as small as possible.

NB.: Always use trimming sticks of good insulating material, as there is high voltage on the contacts.
Depress contacts with great care, as otherwise they may be damaged.

Crystal frequencies kc/s	Screw in contact-numbers
1600–2100	2 and 22
2100–3100	1 and 23
3100–4200	none

D. Test meter

With the TEST METER of the transmitter and the METER SWITCH belonging to it the functions of the P.A.-stage are controlled.
In position Ik1 and Ik2 the cathode-current is measured in each of the 2 P.A.-tubes. The meter is calibrated for full deflection of 200 mA.
The cathode-current in the 2 tubes must be equal and must not exceed a max. of 135 mA. (Reading abt. the red line).
In position Ik the total cathode-current in the 2 P.A.-tubes is measured. The meter is calibrated for full deflection of 400 mA. The total cathode-current must out of consideration for the tubes *never* exceed 270 mA (red line). The meter switch must under normal operation always be placed in position Ik.
In position Ig1 the total grid-current of the P.A.-stage is measured. The meter is calibrated for full scane deflection of 12 mA. The gridcurrent must under normal operation be 4-8 mA. From the factory the transmitter has been adjusted for that current, but if crystals of a minor activity are inserted, it may be necessary to have the transmitter re-adjusted, and this re-adjustment is carried out by means of the potentiometer R70 placed on the heat screen behind the tubes (see fig. 4). If the mentioned re-adjustment should not be sufficient, the potentiometer R67 at the same place, which regulates the screen grid voltage and thus the amplification of the buffer tube, may also be adjusted until sufficient grid-current has been obtained.
In the position Va the anode-voltage of the P.A.-tubes is measured. The metes is calibrated for full scane deflection of 600 Volt. The anode-voltage must under normal operation, i.e. nominal supply voltage, be 570 Volt.
In position Vf the filament voltage of the tubes and the supply voltage of the modulator are measured. The meter is calibrated for full deflection of 60 Volt.

E. Technical data

Type	86D
Number of Channels	32
Frequency Range	1,6–4,2 Mc/s
Unmodulated Carrier Power	70 Watt
	Reduced: < 10 Watt
Frequency Stability	0,002 %
Harmonic Suppression	> 50 dB
Modulation	Anode-Screen Grid
Modulation Percentage	95 %
Distortion	< 6 %
Modulation Characteristics	± 1,5 dB between 250–3000 c/s
	< 20 dB at 3500 c/s
	< 40 dB at 5000 c/s
Noise Modulation	< 40 dB
Types of Service	A3 (Telephony, Simplex and Duplex
Hailer	12 Ohm – 30 Watt
But-in Power Pack	12/24 V DC
Dimensions	Height: 285 cm
	Width: 492 cm
	Depth: 325 cm handset included
Weight	26 kg

F. Service

The transmitter 86D is built-up of small sections to improve accessibility, making servicing easier.
Both modulator and power pack are separate units, which can be removed from the transmitter.
By loosening the screws in the topmost terminal strip on the left side of the transmitter and a screw marked M below the fuse cover, the modulator can be taken off.
The power pack is removed in the same way by loosening the screws in the terminal strip at the bottom of the left side of the transmitter and two screws marked P below the fuse cover.
There is free admittance to oscillator and buffer chassis at the right side of the transmitter (see fig. 3). On this chassis there are two printed circuit boards the upper being the peaking-circuit, and the lower being the oscillator-circuit.
Of the three tubes of the transmitter, the buffer-tube is the one closest to the right side of the transmitter (see fig. 4).
The P.A.-chassis is placed under the 2 P.A.-tubes (see fig. 5).

G. Circuit specification

I. RF circuit

The transmitter RF-section is composed of the following circuits: Oscillator-stage, buffer-stage, P.A.-stage and aerial tuning.
The oscillator is a transistorized Pierce-Colpitts circuit with the crystal between base and chassis. The supply voltage to the oscillator is delivered by the grid-cathode of the buffer-tube, by which a feed back of the oscillator is obtained, so that the control voltage to the buffer is kept almost constant and independent of the crystal activity. The frequency of the oscillator is tuned by trimmer 65. The crystal capacitance must be 30 pF.
The control voltage from the oscillator is lead directly to the control grid of the buffer-tube. The buffer is driven in class A, and its amplification can be adjusted by means of the potentiometer R67, which regulates the screen grid voltage of the tube. The potentiometer is placed on the heat screen behind the tubes (see fig. 4). The R.F.-voltage of the buffer is lead over a peaking circuit made up of 4 choke coils L5, L6, L7 and L8 and 2 capacitors C0 and C72 to the control grid of the P.A.-tubes.
The 2 parallel tubes of the P.A.-stage are driven in class C. The grid voltage is obtained from the power pack of the transmitter. It is adjusted by the potentiometer R70. The grid current in the P.A.-tubes is measured by means of the TEST METER of the transmitter across the measuring resistor R71; the current must be 4-8 mA.

The cathode current of the individual P.A.-tubes is measured across the resistors R74, R78 and R79, and the total cathode current of the tubes is measured across the resistor R79. The P.A.-stage is anode-screen-grid modulated. The screen grid voltage for the tubes is obtained from a separate winding in the power pack. The output reduction of the P.A.-stage is accomplished by reducing the screen grid voltage across the resistors R83 and R84 by means of the switch S3 (TEST METER).
The 2 P.A.-tubes are power supplied through a RF choke coil L2, the tank circuit being connected to the anode through a 1000 pF capacitor. The tank circuit is a pi-network with fixed capacitors. In order to obtain optimum tank circuit efficiency at any frequency, three different pairs of tuning capacitors are used in covering the frequency range. Tuning is accomplished by shorting out parts of the P.A.-coil 3 and the alignment coil L4. The aerial tuning circuit is connected to the tank circuit across the lowimpe-

dance end of the pi-network, which is composed of a number of capacitors in series. The aerial tuning circuit consists of a variometer and two capacitors, which permit tuning the transmitter to all aerials occurring in practice. The aerial current is measured through a current transformer and a detector circuit by the AERIAL METER.

II. Modulator (see fig. 6, 7 and 8)

The modulator of the transmitter is fully transistorized. The carbon microphone of the handset drives the base of the 1st AF transistor through a potentiometer R25, controlling the sensitivity of the modulator (VOLUME). The 1st AF transistor works into a clipper circuit consisting of the diodes D10 and D11, followed by a double low-pass-filter which filters the clipped signal at the same time cutting off all frequencies above 3 kc/s. There are also before the 2nd AF transistor 2 potentiometers, R35 and R37, out of which R35 controls the output voltage of the modulator and thus the modulation percentage of the transmitter. R37 is coupled in by the switch S3 (REDUCED – FULL POWER) and reduces the output voltage of the modulator, so that the modulation percentage will not exceed 100 %, when the output of the transmitter is reduced. The 2nd AF transistors is followed by the driver transistors, which work into the output stage via a driver transformer. The output stage consits of 2 power transistors in class B push-pull. The output transformer secondary has four windings: two for modulating the anode- and the screen-grid voltages respectively, one for the connection of hailer and one for feed back. The power transistors are fitted with collector-emitter protection diodes as described under III POWER PACK.

For control of the modulation percentage of the transmitter, turn up fully the potentiometer for the microphone-sensitivity R25 (see fig. 3 and 7), after which the wanted modulation is fixed by means of the potentiometer for the modulation percentage R35 (see fig. 3 and 7). R25 must be fully turned up (opened) in order to be sure that clipping is obtained, when the microphone is exposed to an alternating voltage. Once the modulation percentage has been fixed by means of R35, the microphone sensitivity can be fixed by means of R25, so that at normal speaking clipping will just be avoided.

The modulator is available in a 12 and a 24 Volt DC issue.

III. Power pack

The DC-converter furnishes anode-current, grid- and control-grid-bias to the transmitter tubes.

The DC-converter consists of two power transistors T1 and T2 in a multivibrator circuit. The circuit comprises two transformers, a control transformer, which is driven to saturation, and a power transformer.

The DC-converter is equipped with two base protection diodes D1 and D2, which prevent the base-emitter-voltage from exceeding 1 Volt, as the transistors would burn out, if that happened. Further there are two collector protection diodes D3 and D4, which are zenerdiodes on 68 Volt, and which prevent the collector-voltage from rising to a level high enough to destroy the transistors, when transient spikes are present in the supply voltage.

IV. Relay and switching circuits (see fig. 2, 8 and 10)

The transmitter is equipped with 4 relays:

RE1 is an auxiliary relay, which is controlled by the telephone key. RE1 regulates to-

gether with S5 (FUNCTION SWITCH) the control current to other relays at the same time stopping the oscillator and the P.A.-stage. RE1 is placed in the uppermost part of the transmitter to the right.
RE2 is the power relay of the modulator.
RE2 is activated by RE1, when S5 (FUNCTION SWITCH) is in the positions HAILER, SIMPLEX and DUPLEX. RE2 is placed in the modulator unit.
RE3 is the power relay of the power pack. RE3 is activated by RE1, when S5 (FUNCTION SWITCH) is in the positions SIMPLEX and DUPLEX. RE3 is placed in the power pack unit.
RE4 is the aerial relay of the transmitter. RE4 is activated by RE1, when S5 (FUNCTION SWITCH) is in the position DUPLEX and SIMPLEX. RE4 switches the transmitter aerial between the transmitter and the receiver, when S5 (FUNCTION SWITCH) is in the position SIMPLEX, whereas it switches off the transmitter aerial, when S5 is in the position DUPLEX, if the telephone key is released.
In order to protect the transmitter against a supply voltage of the wrong polarity, a polarizing diode is inserted in series with RE1.
The crystal switch and the channel selector drum are mechanically ganged together in such a way that the channel no.s on the same line on the frequency board (for instance channel 13 and 29) have P.A.-tuning in common.
If the receiver used in combination with the transmitter is equipped with blocking relay, this is to be connected to the terminals at the bottom of the transmitter box marked EXTERNAL RELAY.

H. Changing to another mains Voltage

When changing to another supply voltage than the one, for which the transmitter has been adjusted in the factory, the following changes are to be made:

1. Change the modulator unit for a unit with the wanted voltage. In chapter F you will find a description of this operation.
2. The power pack is converted by moving the short circuits on the resistor R6 and on the windings of the power transformer:

   For 12 Volt short-circuit the following terminals:
   a-b, c-d, e-f, g-h and i-k.

   For 24 Volt short-circuit the terminals:
   b-c and f-g.

   The location of the terminals will be seen in fig. 9 and 12. It is possible to convert the power pack without removing it.

3. Relay and filament current circuit is converted by moving the short circuits on the soldering panel at the right side of the transmitter.

   For 24 Volt short-circuit the terminals:
   t-u.

   For 12 Volt short–circuit the terminals:
   l-m, n-o, q-r, s-t and u-v.

The terminals and the location of the panel will be seen in fig. 3.

Transmitter 86D

Symbol	*Description*			*Manufact.*	
C83	Capacitor	4700 pF	500 V	Philips	2222 563 03472
C84	Capacitor	4700 pF	500 V	Philips	2222 563 03472
C85	Capacitor	4700 pF	500 V	Philips	2222 563 03472
C86	Capacitor	4700 pF	500 V	Philips	2222 563 03472
C87–C90	Capacitor stack			S. P.	
C91–C104	Capacitor stack			S. P.	
C105	Capacitor stack			S. P.	
D15	Diode			Telefunken	OA 160
D16	Diode			A/S Nordisk elektronik	
				Westinghouse	384 A
T13	Transistor			Philips	BF 178
L1	Mini choke			S. P.	S. P. 1462
L2	RF coil			S. P.	S. P. 1469
L3	PA coil	18 uH		S. P.	
L4	PA tuning coil	1,50 uH		S. P.	S. P. 1420
L5	Peaking choke	90 uH		S. P.	SP 1311
L6	Peaking choke	190 uH		S. P.	SP 1355
L7	Peaking choke	50 uH		S. P.	SP 1309
L8	Peaking choke	60 uH		S. P.	SP 1310
L9	Variometer			S. P.	SP
L10	Aerial current coil	58 uH		S. P.	SP 1361

Transmitter 86D

Symbol	*Description*	*Manufact.*	
RE1	Relay	D.F.G.	BV 5506/ 45–09–540
RE4	Relay contacts: 665 K coil: 12 V	Haller	509
Tube 1		R.C.A.	6883 B
Tube 2		R.C.A.	6883 B
Tube 3		R.C.A.	6883 B
M1	Instrument Scale 0–600	Yaguya	Model Rc 52
M2	Instrument Scale 0–5 Amps	Yaguya	Model Rc 52
S1	Micro Switch	T.S.	V. 3
S2	Micro Switch	T.S.	V. 3
S3	Power reduction	Eng. NSF	8825/B121
S4	Meter Switch	MEC.	S. P. 815
S5	Function Switch	MEC.	S. P. 814
LA1	Lamp 12 V 0,1 Amp	Philips	8003
LA2	Lamp 12 V 0,1 Amp	Philips	8003
LA3	Lamp 12 V 0,1 Amp	Philips	8003

Transmitter 86D

Symbol	*Description*				*Manufact.*	
R60	Resistor	6,8 K ohm		½ Watt	Vitrohm	SBT
R61	Resistor	6,8 K ohm		½ Watt	Vitrohm	SBT
R62	Resistor	33 K ohm		½ Watt	Vitrohm	SBT
R63	Resistor	470 ohm		½ Watt	Vitrohm	SBT
R64	Resistor	1,8 K ohm		½ Watt	Vitrohm	SBT
R65	Resistor	560 ohm		5,5 Watt	Philips	2322 320 32561
R66	Resistor	22 K ohm		8 Watt	Philips	2322 320 22223
R67	Potentiometer	22 K ohm		2 Watt	Philips	2322 002 01223
R68	Resistor	4,7 K ohm		5,5 Watt	Philips	2322 320 32472
R69	Resistor	4,7 K ohm		5,5 Watt	Philips	2322 320 32472
R70	Potentiometer	4,7 K ohm		2 Watt	Philips	2322 002 01472
R71	Resistor	11 ohm	1 %	½ Watt	Vitrohm	CEC T–O
R72	Resistor	100 ohm		½ Watt	Vitrohm	SBT
R73	Resistor	1,8 K ohm		5 Watt	Philips	2322 320 32182
R74	Resistor	10 ohm	5 %	1 Watt	Vitrohm	04,016
R75	Resistor	2,6 K ohm	1 %	½ Watt	Vitrohm	CEC T–O
R76	Resistor	100 ohm		½ Watt	Vitrohm	SBT
R77	Resistor	100 ohm		½ Watt	Vitrohm	SBT
R78	Resistor	10 ohm	5 %	1 Watt	Vitrohm	04,016
R79	Resistor	1,5 ohm	5 %	1 Watt	Vitrohm	Type P.P.1
R80	Resistor	2,6 K ohm	1 %	½ Watt	Vitrohm	CEC T–O
R81	Resistor	480 ohm	1 %	½ Watt	Vitrohm	CEC T–O
R82	Resistor	100 ohm		½ Watt	Vitrohm	SBT
R83	Resistor	27 K ohm		8 Watt	Philips	2322 320 22273
R84	Resistor	4,7 K ohm		20 Watt	Rosenthal	ZWO 13 64
R85	Resistor	600 K ohm	1 %	2 Watt	Rosenthal	LCA 0933
R86	Resistor	33 K ohm		8 Watt	Philips	2322 320 22333
R87	Potentiometer	5 K ohm			Morganite	Type U
R88	Resistor	1 K ohm		½ Watt	Philips	2322 101 43102
R89	Resistor	100 ohm			Philips	2322 101 43101
R90	Resistor	5 M ohm	± 20 %	8 KV 2 Watt	Rosenthal	LHK 2
R91	Resistor	3,2 ohm		5 Watt	Vitrohm	Type H
R92	Resistor	27 ohm		5,5 Watt	Philips	2322 320 32279

Transmitter 86D

Symbol	*Description*				*Manufact.*	
R93	Resistor	270	ohm	1 Watt	Vitrohm	ABT
R94	Resistor	33	ohm	8 Watt	Philips	2322 320 21339
R95	Resistor	10	ohm	½ Watt	Philips	2322 212 13109
R96	Resistor	10	ohm	½ Watt	Philips	2322 212 13109
R97	Resistor	10	ohm	½ Watt	Philips	2322 212 13109
R98	Resistor	56	ohm	8 Watt	Philips	2322 320 22569
R99	Resistor	60,4 K ohm	± 1 %		Electrocil	Type C5
R100	Resistor	18	ohm	20 Watt	Rosenthal	ZWO 13/64
R101	Resistor					
C61	Capacitor	1000 pF		5 KV	Ferroperm	9/0138,9
C62	Capacitor	1000 pF		5 KV	Ferroperm	9/0138,9
C63	Capacitor	1000 pF		5 KV	Ferroperm	9/0138,9
C64	Capacitor	1500 pF		500 V	Philips	2222 563 03152
C65	Capacitor trimmer	30 pF			Philips	2222 803 20001
C66	Capacitor	10 pF	2,5 %	160 V	Siemens	B31310–A1100–F
C67	Capacitor	560 pF	2,5 %	160 V	Siemens	B31310–A1561–H
C68	Capalitor	270 pF	2,5 %	160 V	Siemens	B31310–A1271–H
C69	Capaditor	0,01 uF		400 V	Philips	2222 311 51103
C70	Capacitor	47 pF	10 %	5 KV	Ferroperm	9/0121,9
C71	Capacitor	1000 pF		5 KV	Ferroperm	9/0138,9
C72	Capacitor	1000 pF		5 KV	Ferroperm	9/0138,9
C73	Capacitor	1000 pF		5 KV	Ferroperm	9/0138,9
C74	Capacitor	0,22 uF		250 V	Philips	2222 341 89224
C75	Capacitor	0,22 uF		250 V	Philips	2222 341 89224
C76	Capacitor	1000 pF		5 KV	Ferroperm	9/0138,9
C77	Capacitor	0,1 uF		63 V	Efco	FMS.A
C80	Capacitor	0,1 uF			Philips	2222 342 45104
C81	Capacitor	4700 pF		500 V	Philips	2222 563 03472
C82	Capacitor	4700 pF		500 V	Philips	2222 563 03472

Transmitter 86D

Symbol	*Description*		*Manufact.*	
1	Stand off (Aerial)		T.S.	6039
3	Stand off		Stettner	5199a-01M3
1	Control knob	(channel selector)	Philips	2922 511 06201
1	Control knob	(Variometer)	Philips	2922 511 05131
1	Control knob	(Meter Switch	Philips	2922 512 03206
1	Control knob	(Function Switch)	Philips	2922 512 03206
1	Connector Female	10-way plug in	Hirchmann	Bulei 100
1	Connector Male	10-way plug in	Hirchmann	Leist 100
1	Connector Female	Telephone handset	Hirchmann	Mes 60Bz
1	Connector Male	Telephone handset	Hirchmann	Meb 60
1	Telephone handset		T.F.A.	
1	16-way Terminal		Wieland	KL 16/16
1	2-way Terminal		Wieland	8116/2
1	12-way Terminal board		Belling-Lee	L1469
1	9-way Terminal board		Belling-Lee	L1469

Transmitter 86 D

Modulator Unit

Symbol	*Description*			*Manufact.*	
R25	Potentiometer	22 K ohm	log	Morganite	Type U
R26	Resistor	100 ohm	½ Watt	Philips	2322 101 43101
R27	Resistor	100 ohm	½ Watt	Philips	2322 101 43101
R28	Resistor	1,2 K ohm	½ Watt	Philips	2322 101 43122
R29	Resistor	10 K ohm	½ Watt	Philips	2322 101 43103
R30	Resistor	180 ohm	½ Watt	Philips	2322 101 43181
R31	Resistor	120 ohm	½ Watt	Philips	2322 101 43121
R32	Resistor	3,3 K ohm	½ Watt	Philips	2322 101 43332
R33	Resistor	220 ohm	½ Watt	Philips	2322 101 43221
R34	Resistor	3,3 K ohm	½ Watt	Philips	2322 101 43332
R35	Potentiometer	1 K ohm		Morganite	Type U
R36	Resistor	470 ohm	½ Watt	Philips	2322 101 43471
R37	Potentiometer	10 K ohm		Philips	2322 410 05007
R38	Resistor	27 K ohm	½ Watt	Philips	2322 101 43273
R39	Resistor	56 K ohm	½ Watt	Philips	2322 101 43563
R40	Resistor	120 ohm	½ Watt	Philips	2322 101 43121
R41	Resistor	680 ohm	½ Watt	Philips	2322 101 43681
R42	Resistor	33 K ohm	½ Watt	Philips	2322 101 43333
R43	Resistor	100 ohm	½ Watt	Philips	2322 101 43101
R44	Resistor	3,3 K ohm	½ Watt	Philips	2322 101 43332
R45	Resistor, only 12V	opr. 470 ohm	½ Watt	Phillips	2322 101 43471
R45	Resistor, only 24V	opr. 1500 ohm	½ Watt	Phillips	2322 101 43152
D46	Resistor	1 ohm	±5% 1 Watt	Vitrohm	Type PP-1
R47	Resistor	270 ohm	5,5 Watt	Phillips	2322 320 32271
R48	Resistor	0,47 ohm		Vitrohm	Type PP-1
R49	Resistor, konstantan	d=1,2ºmm	Only 12 V o.	S. P.	L= 6 cm
R50	Resistor, konstantan	d=1,2ºmm	Only 12 V o.	S. P.	L= 6 cm
R49	Resistor, konstantan	d=1,2ºmm	Only 24 V o.	S. P.	L=18 cm
R50	Resistor, konstantan	d=1,2ºmm	Only 24 V o.	S. P.	L=18 cm
R51	Resistor	32+1,5 ohm	12+5 Watt	Rosenthal	ZWO 13/64
R52	Resistor	1,8 K ohm	5,5 Watt	Phillips	2322 320 32182

Transmitter 86D
Modulator Unit

Symbol	Description				Manufact.	
C35	Capacitor electrolytic	125uF		16V	Philips	2222 001 15131
C36	Capacitor polyester	0,047uF		250V	Philips	2222 342 45473
C37	Capacitor polyester	0,047uF		250V	Philips	2222 342 45473
C38	Cauacitor polyester	0,47uF		250V	Philips	2222 342 45474
C39	Capacitor electroiytic	80uF		2,5V	Philips	2222 001 41809
C40	Capacitor electrolytic	10uF		16V	Philips	2222 001 45109
C41	Capacitor electrolytic	125uF		16V	Philips	2222 001 15131
C42	Capacitor polyester	0,047uF		250V	Philips	2222 342 45473
C43	Capacitor polystyren	6800pF	± 2,5%	63V	Evox	Type SF
C44	Capacitor polyester	0,047uF		250V	Philips	2222 342 45473
C45	Capacitor polystyren	0,018uF	± 2,5%	63V	Evox	Type SF
C46	Capacitor polyester	0,047uF		250V	Philips	2222 342 45473
C47	Capacitor electrolytic	10uF		16V	Philips	2222 001 45109
C48	Capacitor polystyren	0,01uF		50V	NCC	Cat.N° 05S1
C49	Capacitor electrolytic	80uF		2,5V	Philips	2222 001 41809
C50	Capacitor polystyren	330pF		630V	Siemens	B31310-A6331-K
C51	Capacitor polyester	0,022uF		250V	Philips	2222 342 45223
C52	Capacitor electrolytic	125uF		16V	Philips	2222 001 15131
C53	Capacitor electrolytic	16uF		10V	Philips	2222 001 44169
C54	Capacitor polyester	0,1uF		160V	Philips	2222 311 31104
C55	Capacitor polyester	0,1uF		160V	Philips	2222 311 31104
C56	Capacitor electrolytic	2000pF		55V	Vicon	Ki143x8
C57	Capacitor polyester	0,022uF		250V	Philips	2222 342 45223
C58	Capacitor met.pap.	5000pF		5KV	T.I.	Code N° 619
C59	Capacitor polyester	0,047uF		250V	Philips	2222 342 45473
C60	Capacitor polyester	0,047uF		250V	Philips	2222 342 45473
D10	Diode				Telefunken	BZY 87
D11	Diode				Telefunken	BZY 87

Transmitter 86 D

Modulator Unit

Symbol	*Description*			*Manufact.*	
R25	Potentiometer	22 K ohm	log	Morganite	Type U
R26	Resistor	100 ohm	½ Watt	Philips	2322 101 43101
R27	Resistor	100 ohm	½ Watt	Philips	2322 101 43101
R28	Resistor	1,2 K ohm	½ Watt	Philips	2322 101 43122
R29	Resistor	10 K ohm	½ Watt	Philips	2322 101 43103
R30	Resistor	180 ohm	½ Watt	Philips	2322 101 43181
R31	Resistor	120 ohm	½ Watt	Philips	2322 101 43121
R32	Resistor	3,3 K ohm	½ Watt	Philips	2322 101 43332
R33	Resistor	220 ohm	½ Watt	Philips	2322 101 43221
R34	Resistor	3,3 K ohm	½ Watt	Philips	2322 101 43332
R35	Potentiometer	1 K ohm		Morganite	Type U
R36	Resistor	470 ohm	½ Watt	Philips	2322 101 43471
R37	Potentiometer	10 K ohm		Philips	2322 410 05007
R38	Resistor	27 K ohm	½ Watt	Philips	2322 101 43273
R39	Resistor	56 K ohm	½ Watt	Philips	2322 101 43563
R40	Resistor	120 ohm	½ Watt	Philips	2322 101 43121
R41	Resistor	680 ohm	½ Watt	Philips	2322 101 43681
R42	Resistor	33 K ohm	½ Watt	Philips	2322 101 43333
R43	Resistor	100 ohm	½ Watt	Philips	2322 101 43101
R44	Resistor	3,3 K ohm	½ Watt	Philips	2322 101 43332
R45	Resistor, only 12V	opr. 470 ohm	½ Watt	Phillips	2322 101 43471
R45	Resistor, only 24V	opr. 1500 ohm	½ Watt	Phillips	2322 101 43152
D46	Resistor	1 ohm	±5% 1 Watt	Vitrohm	Type PP-1
R47	Resistor	270 ohm	5,5 Watt	Phillips	2322 320 32271
R48	Resistor	0,47 ohm		Vitrohm	Type PP-1
R49	Resistor, konstantan	d=1,2°mm	Only 12 V o.	S. P.	L= 6 cm
R50	Resistor, konstantan	d=1,2°mm	Only 12 V o.	S. P.	L= 6 cm
R49	Resistor, konstantan	d=1,2°mm	Only 24 V o.	S. P.	L=18 cm
R50	Resistor, konstantan	d=1,2°mm	Only 24 V o.	S. P.	L=18 cm
R51	Resistor	32+1,5 ohm	12+5 Watt	Rosenthal	ZWO 13/64
R52	Resistor	1,8 K ohm	5,5 Watt	Phillips	2322 320 32182

Transmitter 86D
Modulator Unit

Symbol	*Description*				*Manufact.*	
C35	Capacitor electrolytic	125uF		16V	Philips	2222 001 15131
C36	Capacitor polyester	0,047uF		250V	Philips	2222 342 45473
C37	Capacitor polyester	0,047uF		250V	Philips	2222 342 45473
C38	Cauacitor polyester	0,47uF		250V	Philips	2222 342 45474
C39	Capacitor electroiytic	80uF		2,5V	Philips	2222 001 41809
C40	Capacitor electrolytic	10uF		16V	Philips	2222 001 45109
C41	Capacitor electrolytic	125uF		16V	Philips	2222 001 15131
C42	Capacitor polyester	0,047uF		250V	Philips	2222 342 45473
C43	Capacitor polystyren	6800pF	± 2,5%	63V	Evox	Type SF
C44	Capacitor polyester	0,047uF		250V	Philips	2222 342 45473
C45	Capacitor polystyren	0,018uF	± 2,5%	63V	Evox	Type SF
C46	Capacitor polyester	0,047uF		250V	Philips	2222 342 45473
C47	Capacitor electrolytic	10uF		16V	Philips	2222 001 45109
C48	Capacitor polystyren	0,01uF		50V	NCC	Cat.N° 05S1
C49	Capacitor electrolytic	80uF		2,5V	Philips	2222 001 41809
C50	Capacitor polystyren	330pF		630V	Siemens	B31310-A6331-K
C51	Capacitor polyester	0,022uF		250V	Philips	2222 342 45223
C52	Capacitor electrolytic	125uF		16V	Philips	2222 001 15131
C53	Capacitor electrolytic	16uF		10V	Philips	2222 001 44169
C54	Capacitor polyester	0,1uF		160V	Philips	2222 311 31104
C55	Capacitor polyester	0,1uF		160V	Philips	2222 311 31104
C56	Capacitor electrolytic	2000pF		55V	Vicon	Ki143x8
C57	Capacitor polyester	0,022uF		250V	Philips	2222 342 45223
C58	Capacitor met.pap.	5000pF		5KV	T.I.	Code N° 619
C59	Capacitor polyester	0,047uF		250V	Philips	2222 342 45473
C60	Capacitor polyester	0,047uF		250V	Philips	2222 342 45473
D10	Diode				Telefunken	BZY 87
D11	Diode				Telefunken	BZY 87

Transmitter 86D

Modulator Unit

Symbol	*Description*		*Manufact.*	
D12	Diode	only 12V operation	Silec	1N3032B
D13	Diode	only 12V operation	Silec	1N3032B
D12	Diode	only 24V operation	Silec	1N3040B
D13	Diode	only 24V operation	Silec	1N3040B
T5	Transistor		Philips	BC 109b
T6	Transistor		Philips	BF 179
T7	Transistor		Philips	BF 179
T88	Transistor		ITT	BD 107a
T9	Transistor	only 12V operation	Delco	2N1523
T10	Transistor	only 12V operation	Delco	2N1523
T9	Transistor	only 24V operation	Delco	2N2492
T10	Transistor	only 24V operation	Delco	2N2492
L15	Filtercoil	112mH	S.P.	SP 1419
L16	Filtercoil	91mH	S.P.	SP 1418
TR3	Drivertransformer		Tradania	TD 1043
TR4	Outputtransformer		Scanel.	SE 78 AH3018/2
RE2	Relay	coil 12V	Bosch	0332003011 SH/SE 20A2
F4	Fuse 20 Amp.	only 12Volt supply		
F5	Fuse 20 Amp.	only 12Volt supply		
F4	Fuse 15 Amp.	only 24Volt supply		
F5	Fuse 15 Amp.	only 24Volt supply		

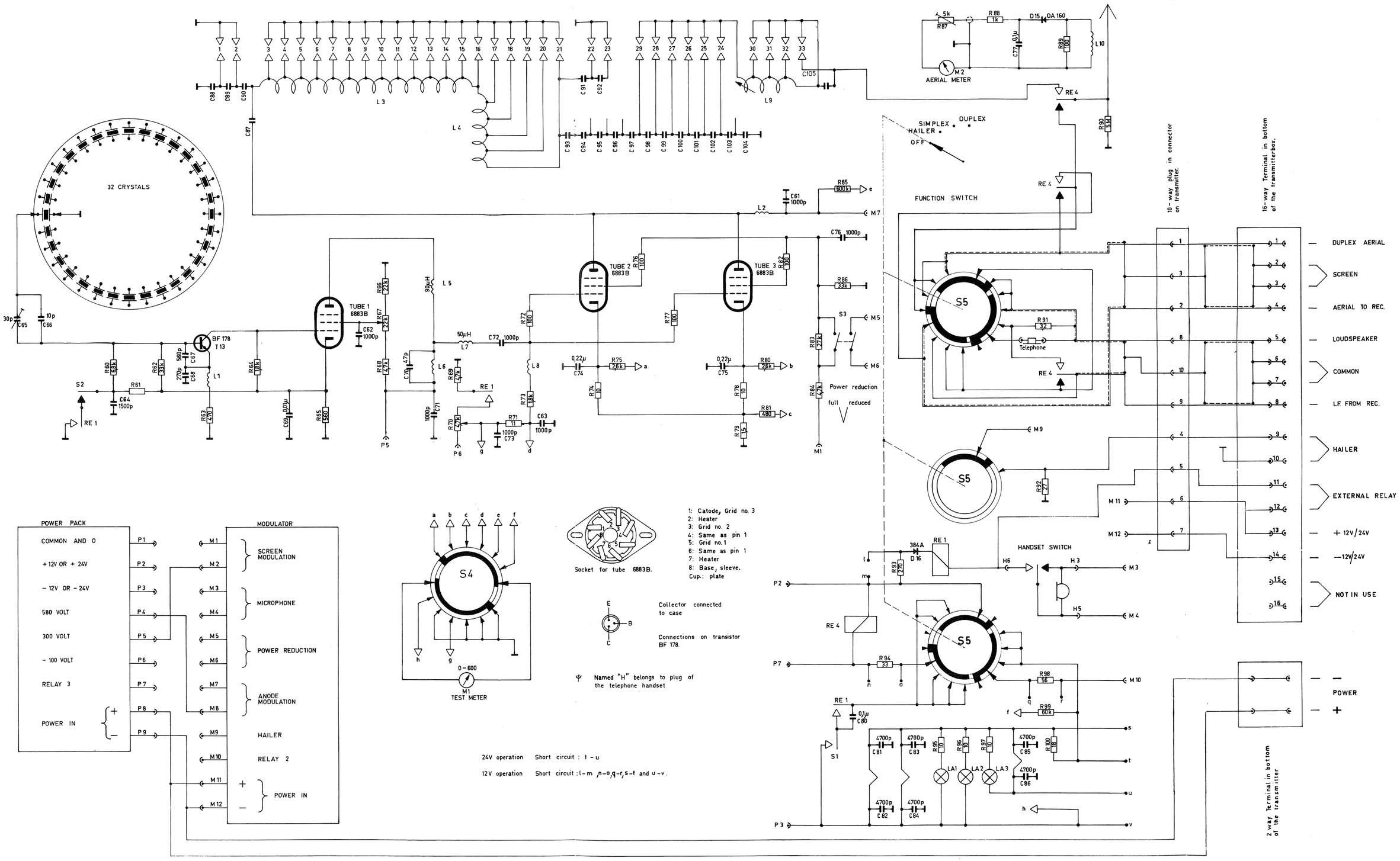

Dette diagram omfatter SAILOR 86D, serie A-B
Dieses Schaltschema betrifft SAILOR 86D, Serie A-B
This diagram refers to SAILOR 86D, series A-B
Ce scèma comprend SAILOR 86D, sèrie A-B
Este diagrama comprende SAILOR 86D, serie A-B

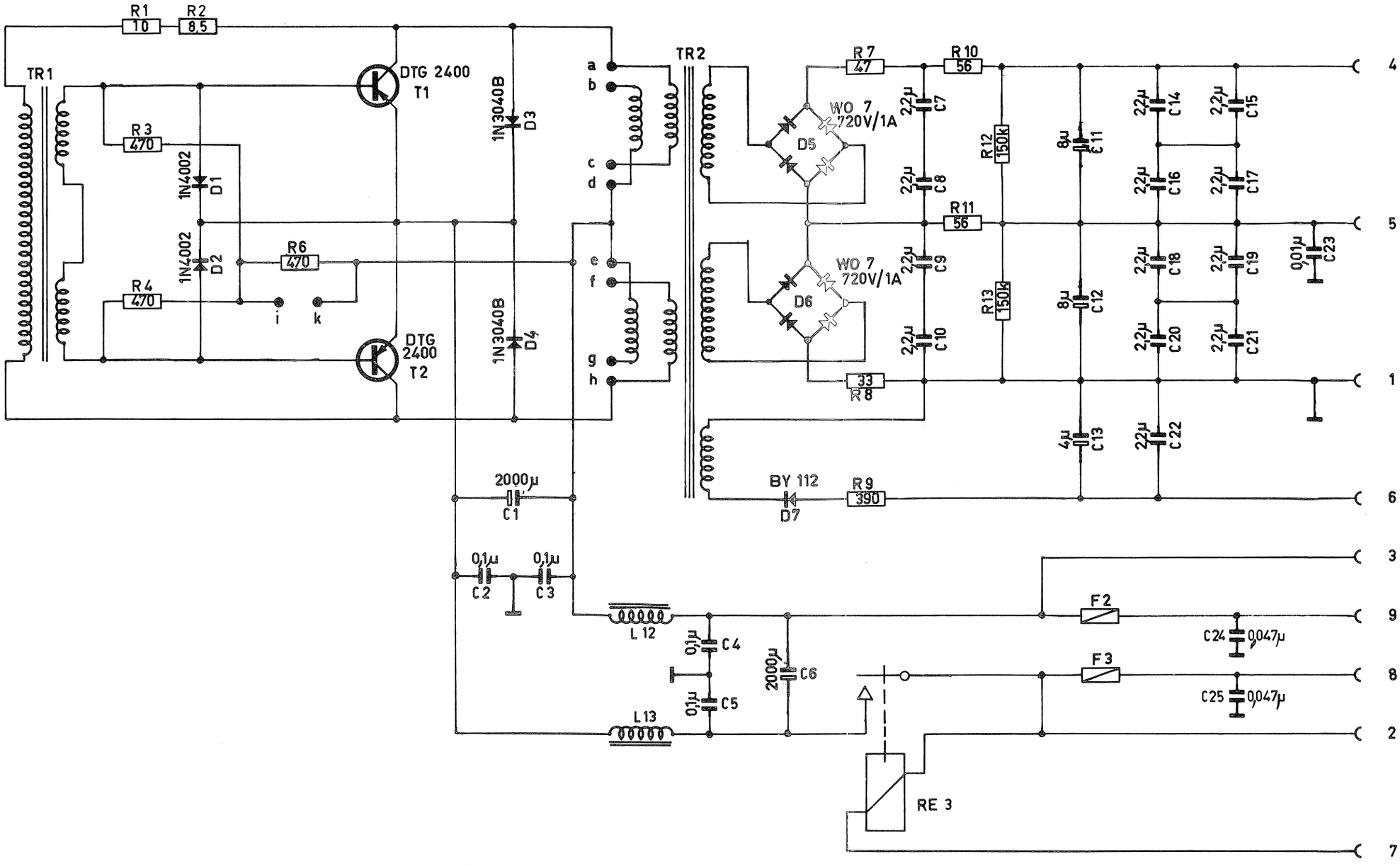

24V operation : Short circuit b-c, d-e and f-g.

12V operation: Short circuit a-b, c-d-e-f, g-h and i-k.

12V/24V DC POWER SUPPLY
SAILOR 86D

24 V operation: Short circuit b-c, d-e and f-g.
T 9 and T 10 must be 2 N 2492
D 12 and D 13 must be 1 N 3040 B
R 45 must be 1500 Ω

12 V operation: Short circuit a-b, c-d-e-f, g-h and n-o.
T 9 and T 10 must be 2 N 1523
D 12 and D 13 must be 1 N 3032 B
R 45 must be 470 Ω

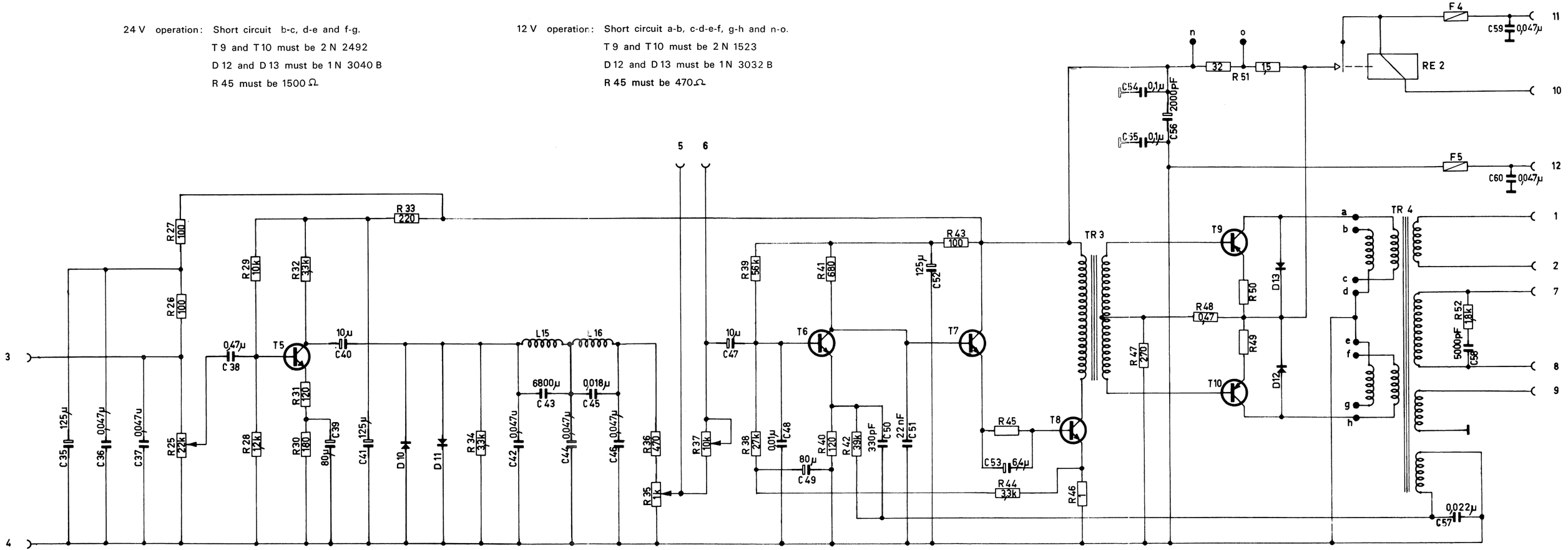

Modulator Unit Sailor 86 D

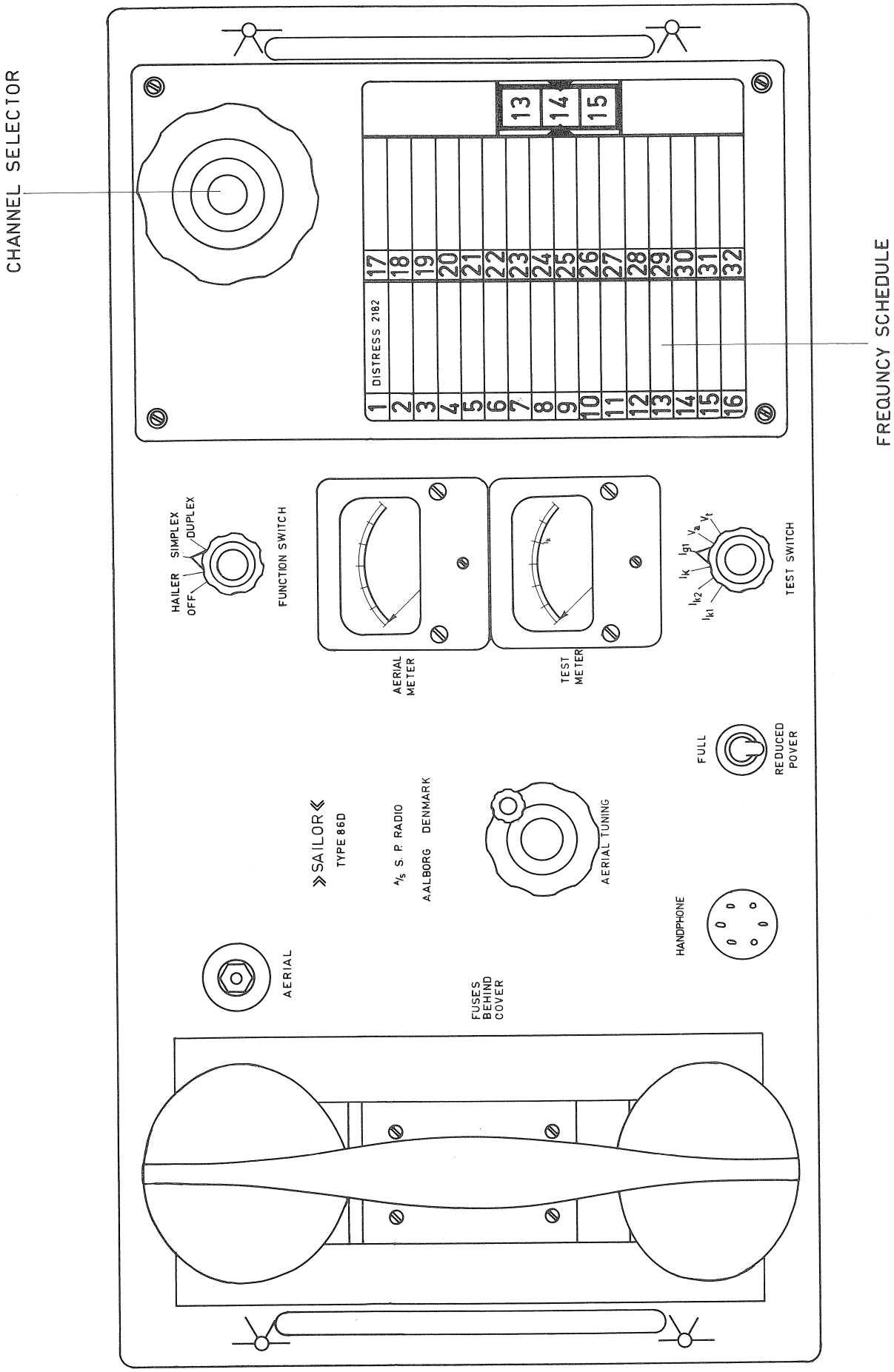

Fig. 1. Front plate Layout

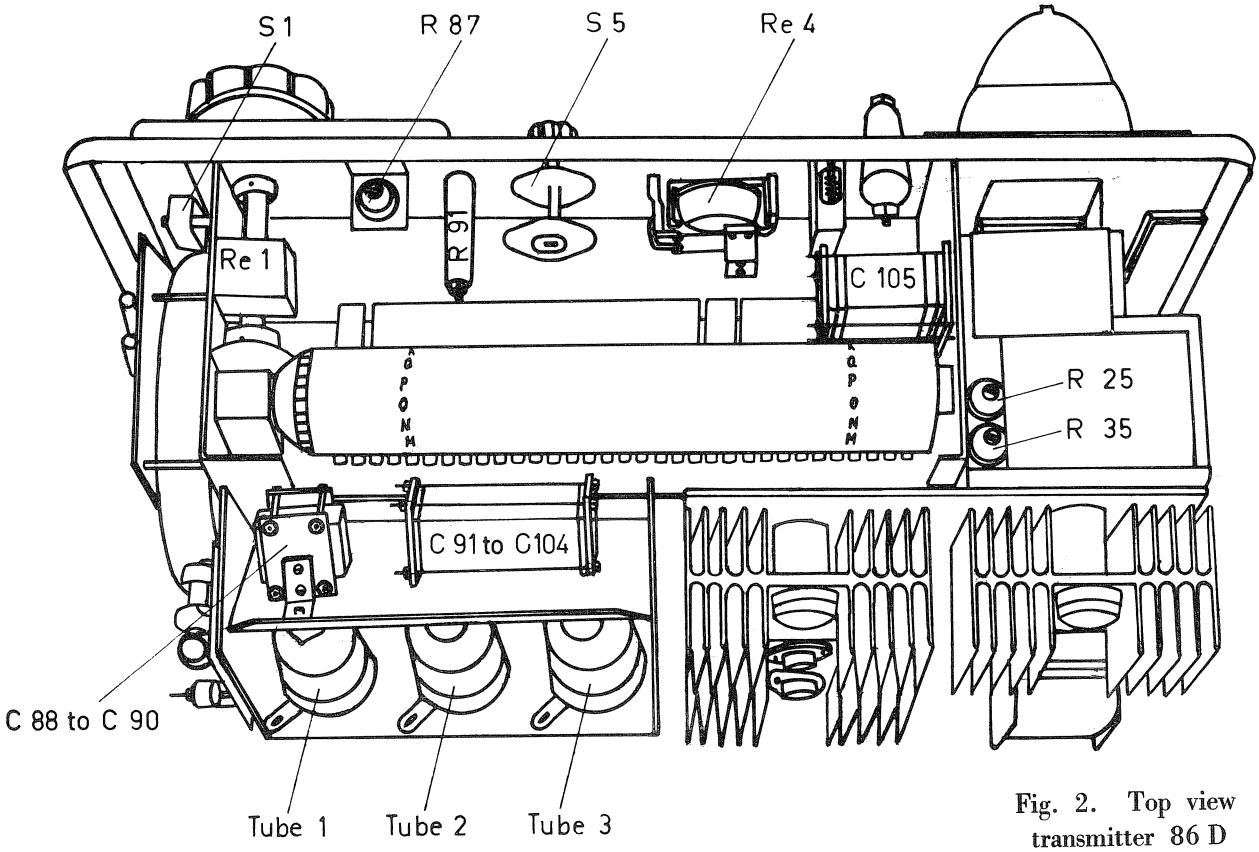

Fig. 2. Top view transmitter 86 D

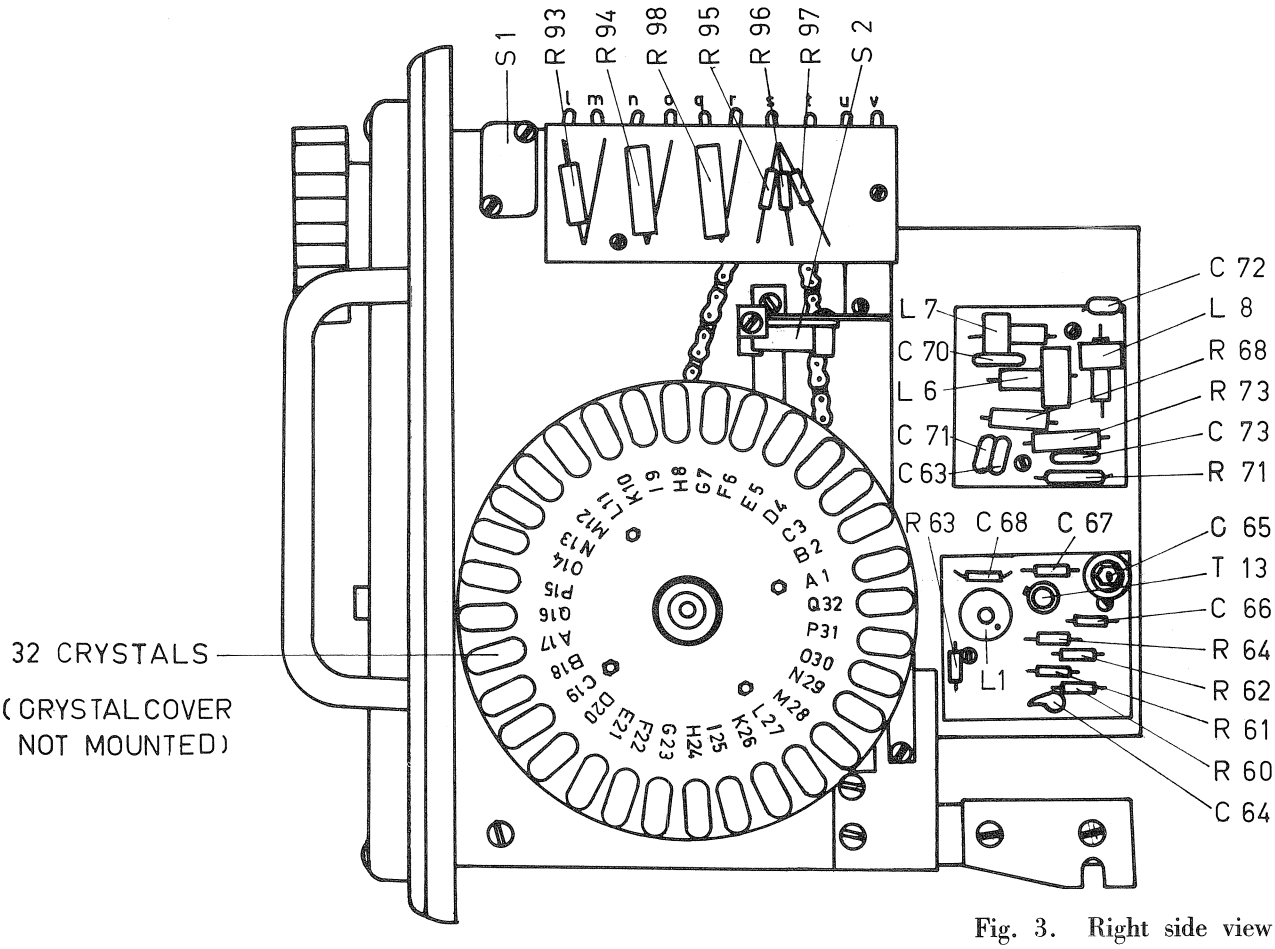

Fig. 3. Right side view transmitter 86 D

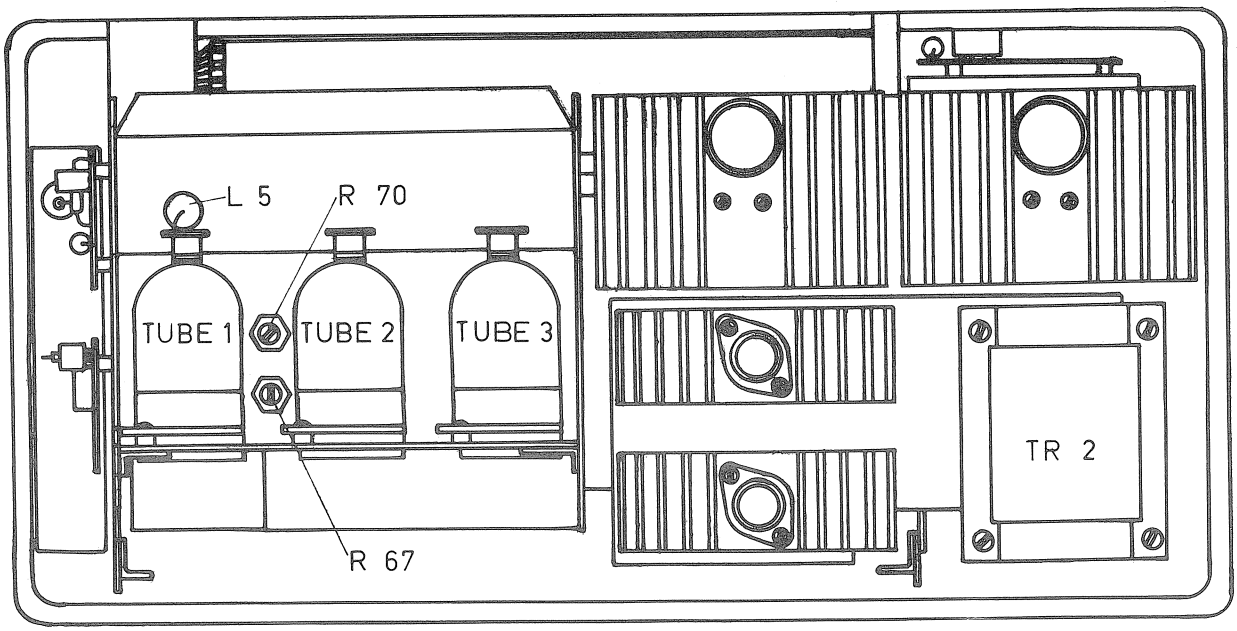

Fig. 4. Back sideview transmitter 86 D

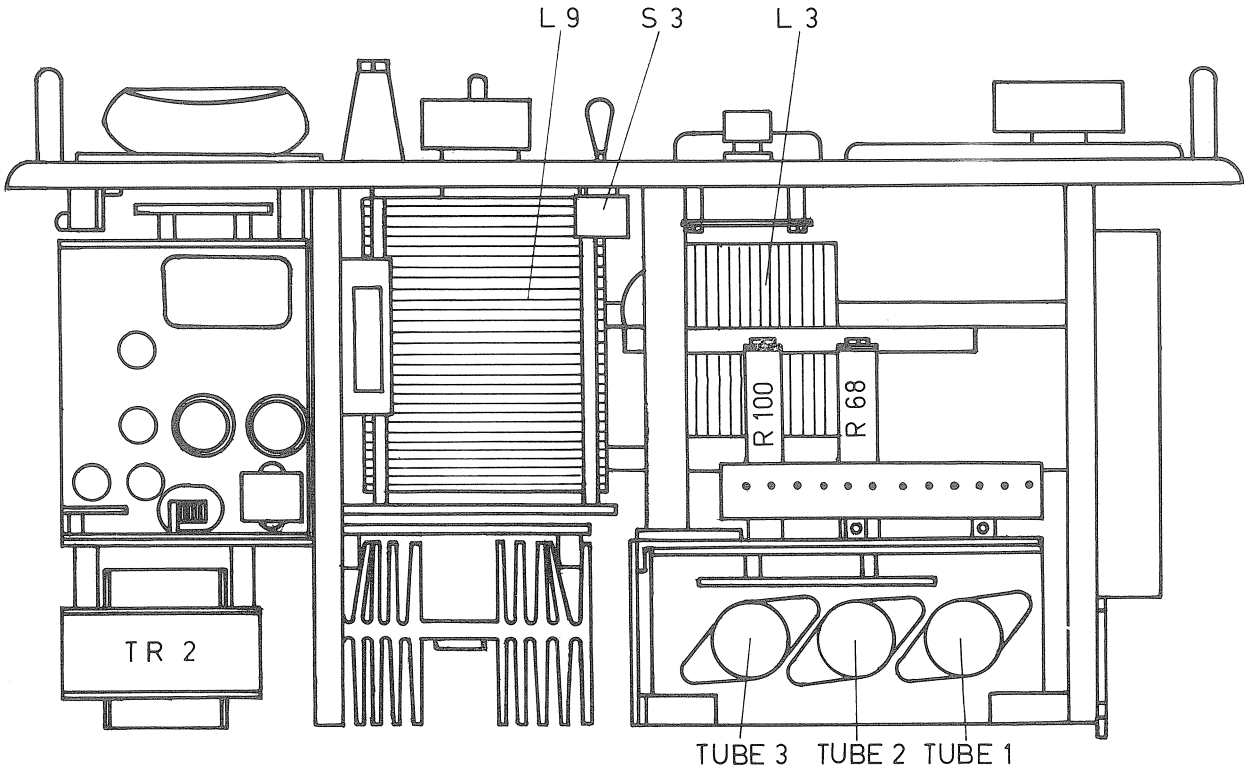

Fig. 5. Botton view transmitter 86 D

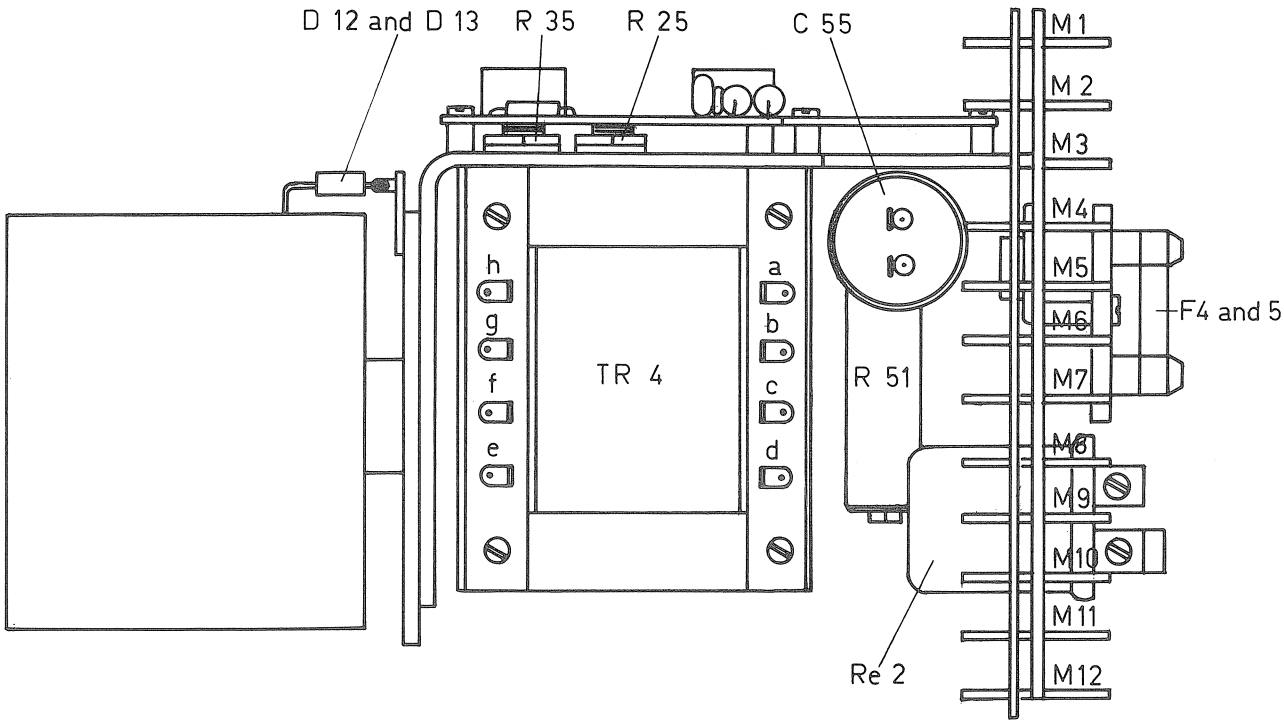

Fig. 6. Modulator unit terminal side 86 D

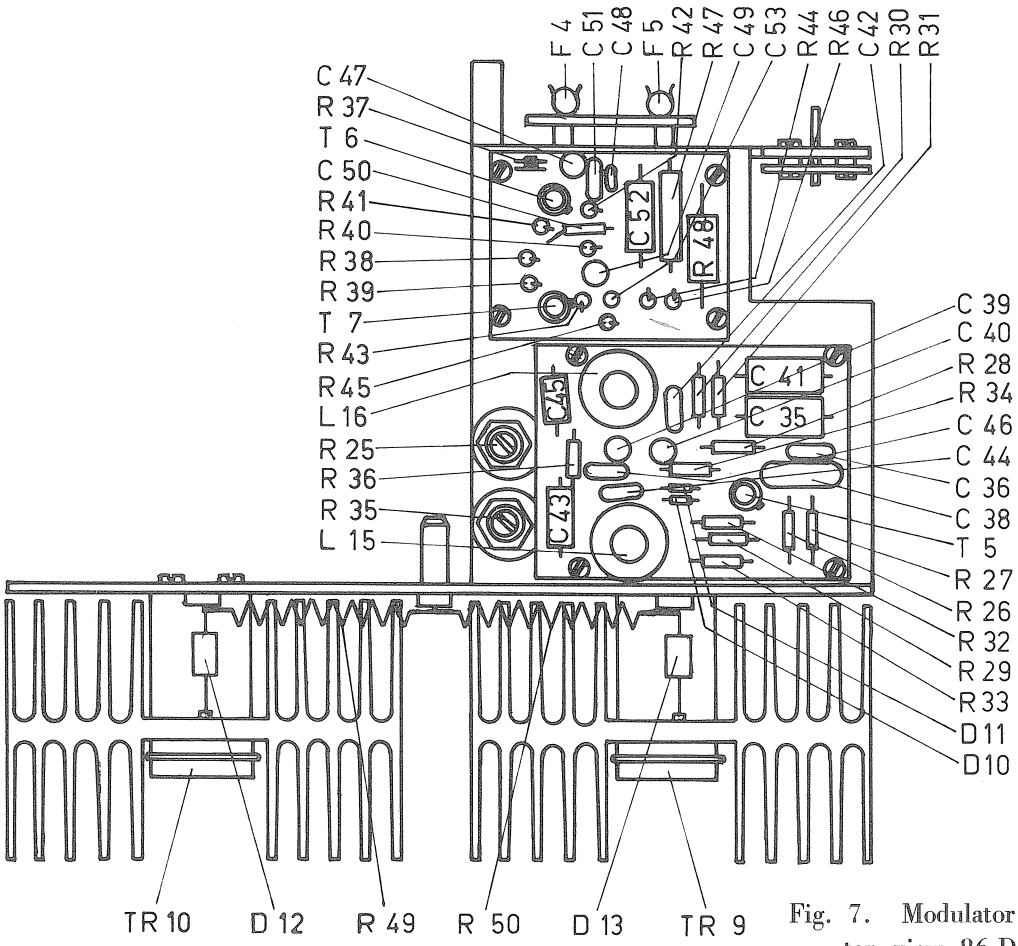

Fig. 7. Modulator unit top view 86 D

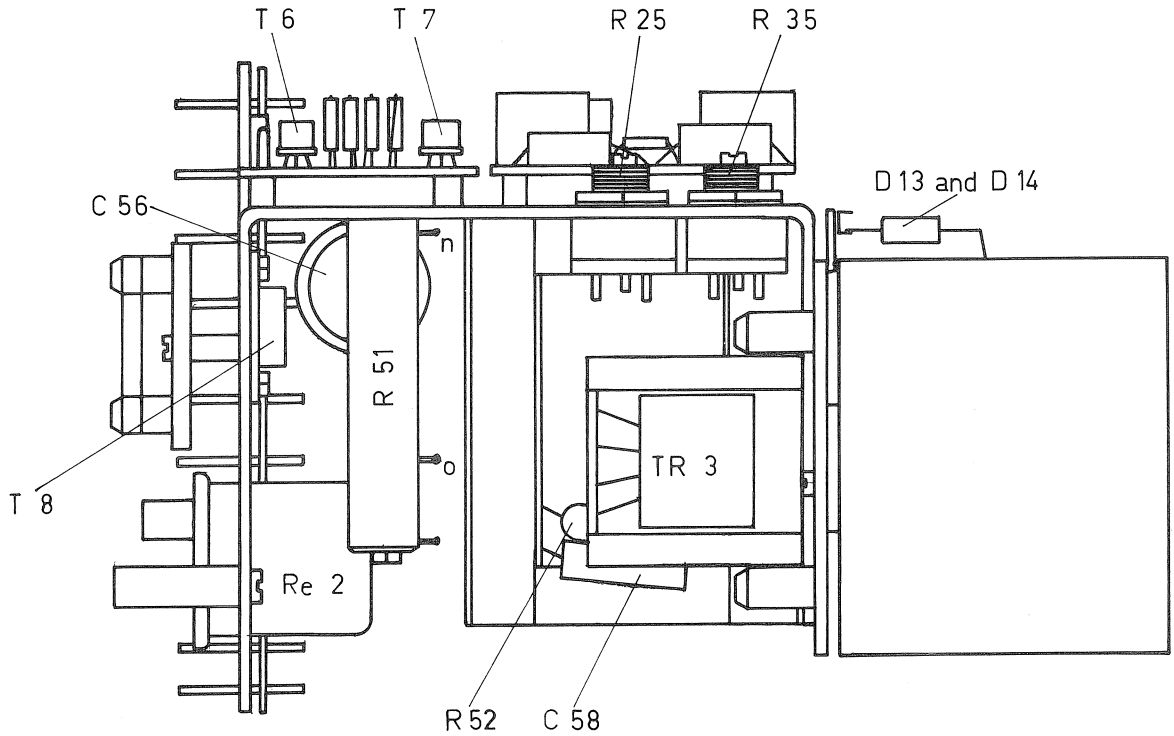

Fig. 8. Modulator unit non-terminal side view

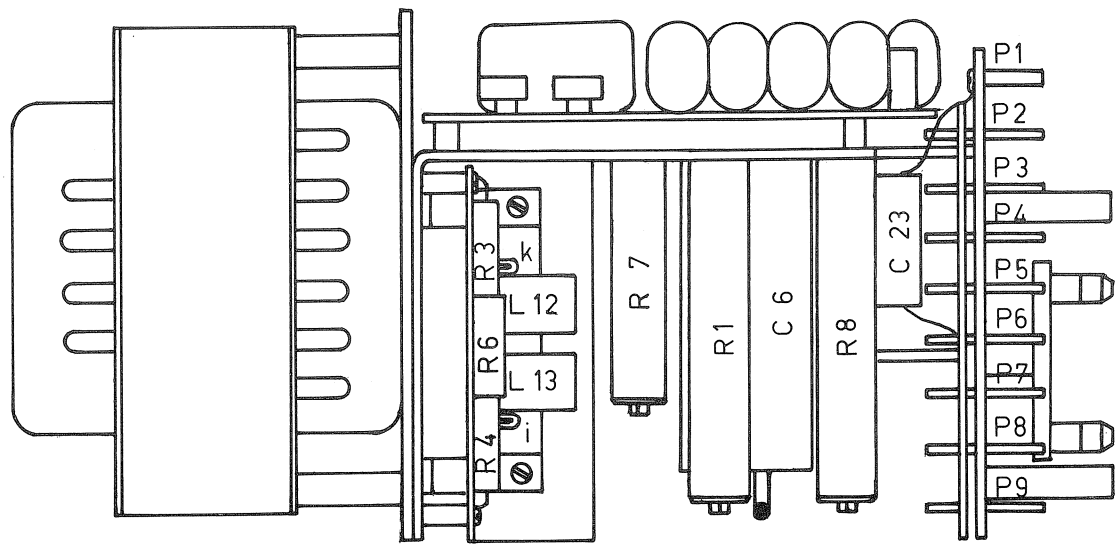

Fig. 9. Converter unit terminal side 86 D

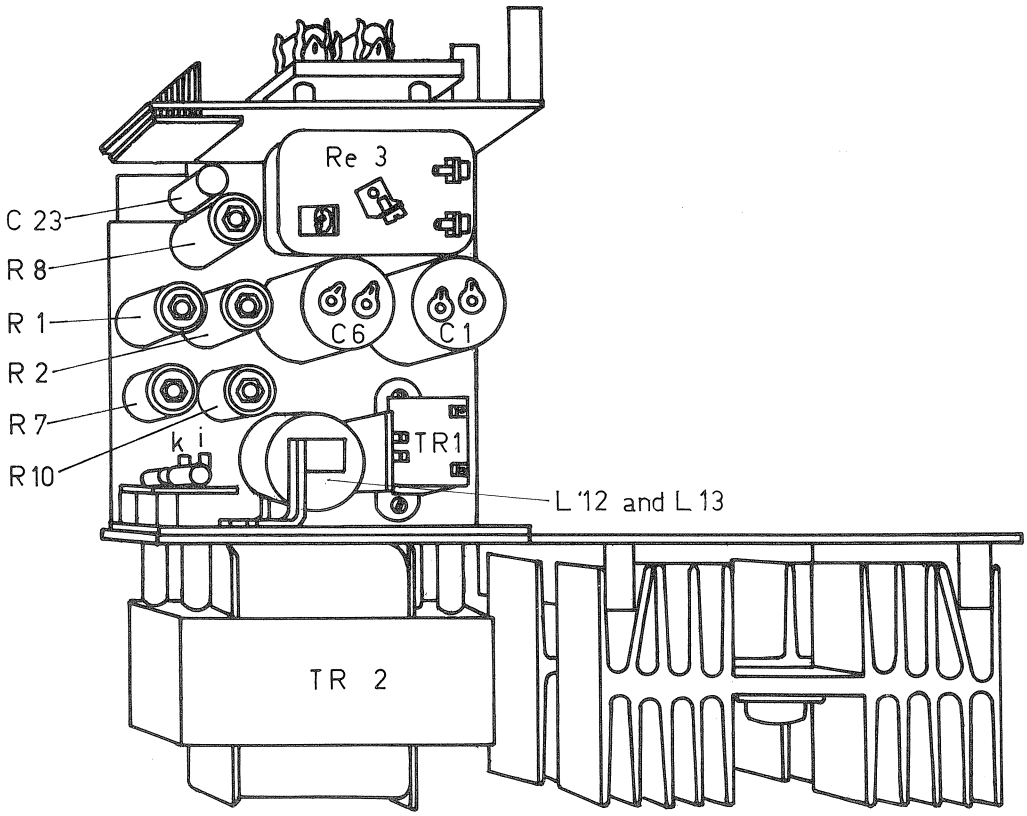

Fig. 10. Converter unit bottom view 86 D

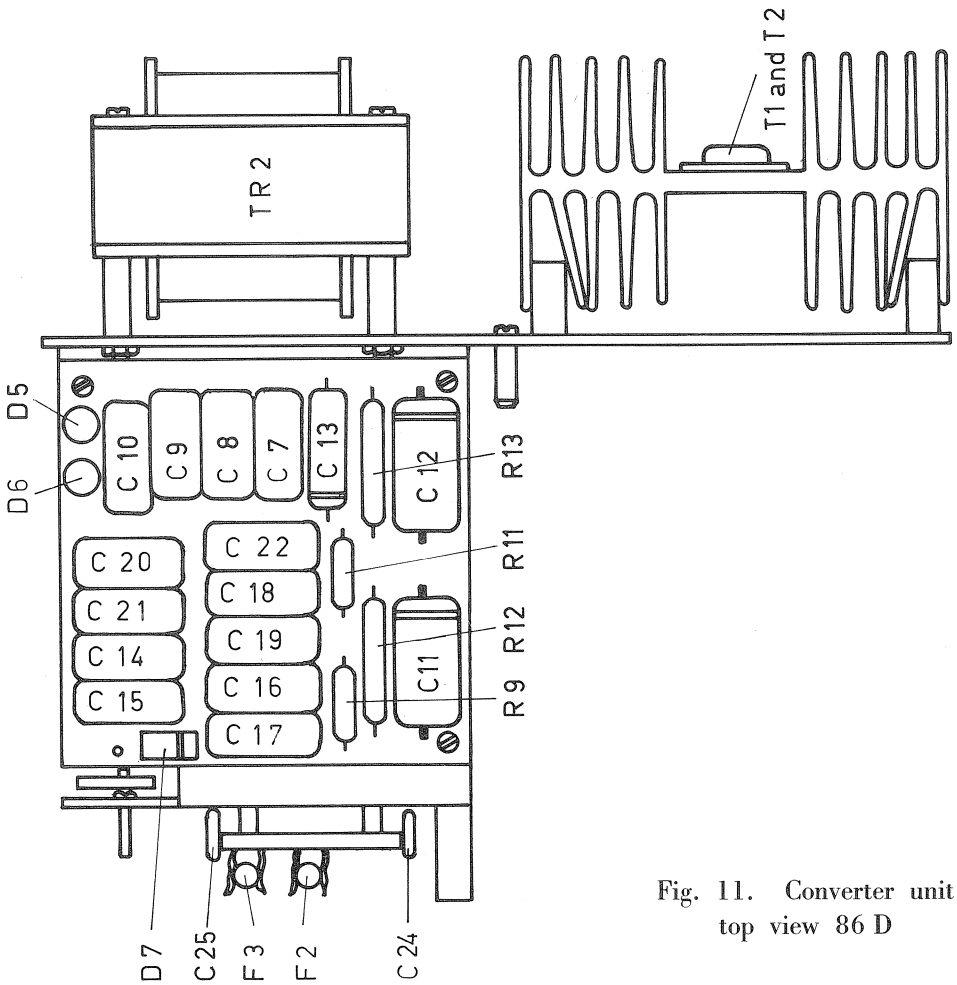

Fig. 11. Converter unit top view 86 D

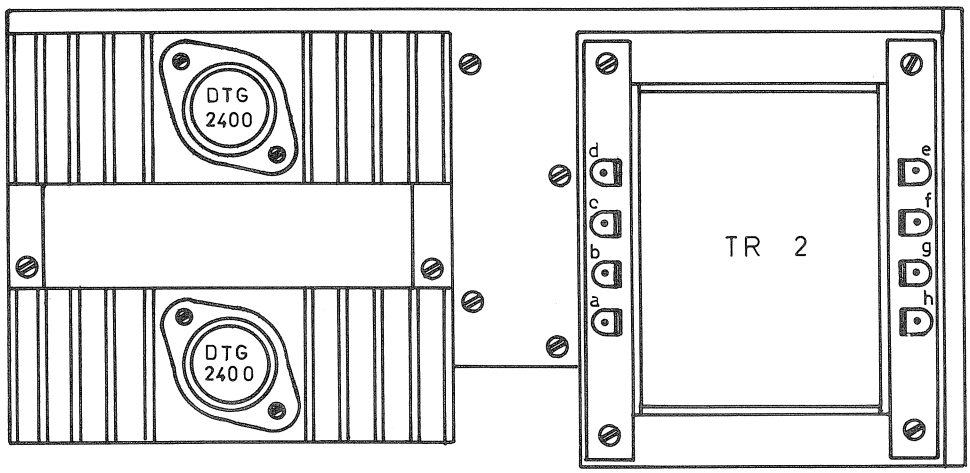

Fig. 12. Converter unit terminal side 86 D

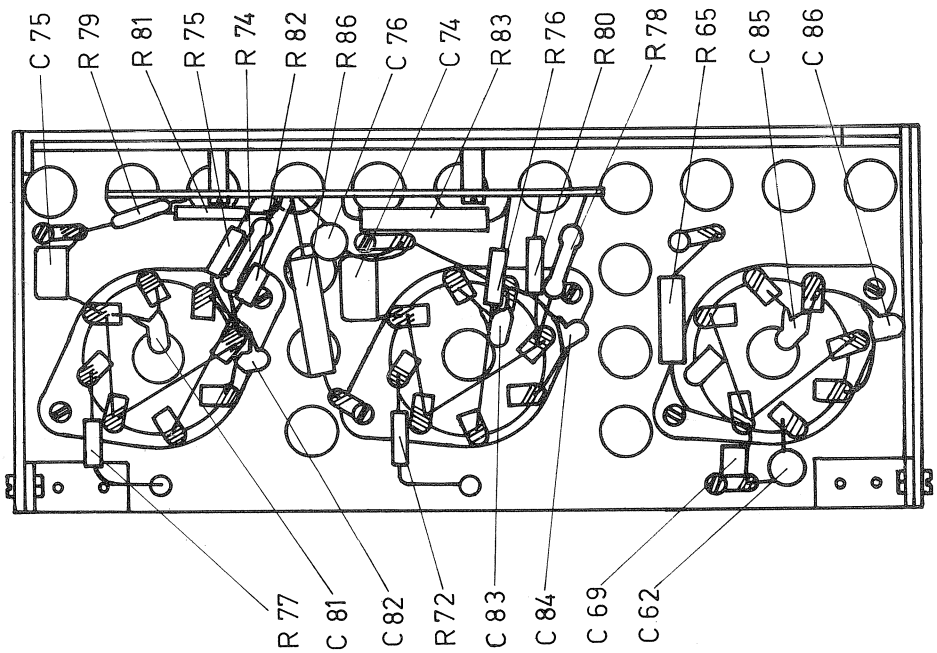

Fig. 13. P.A. Chassis 86 D

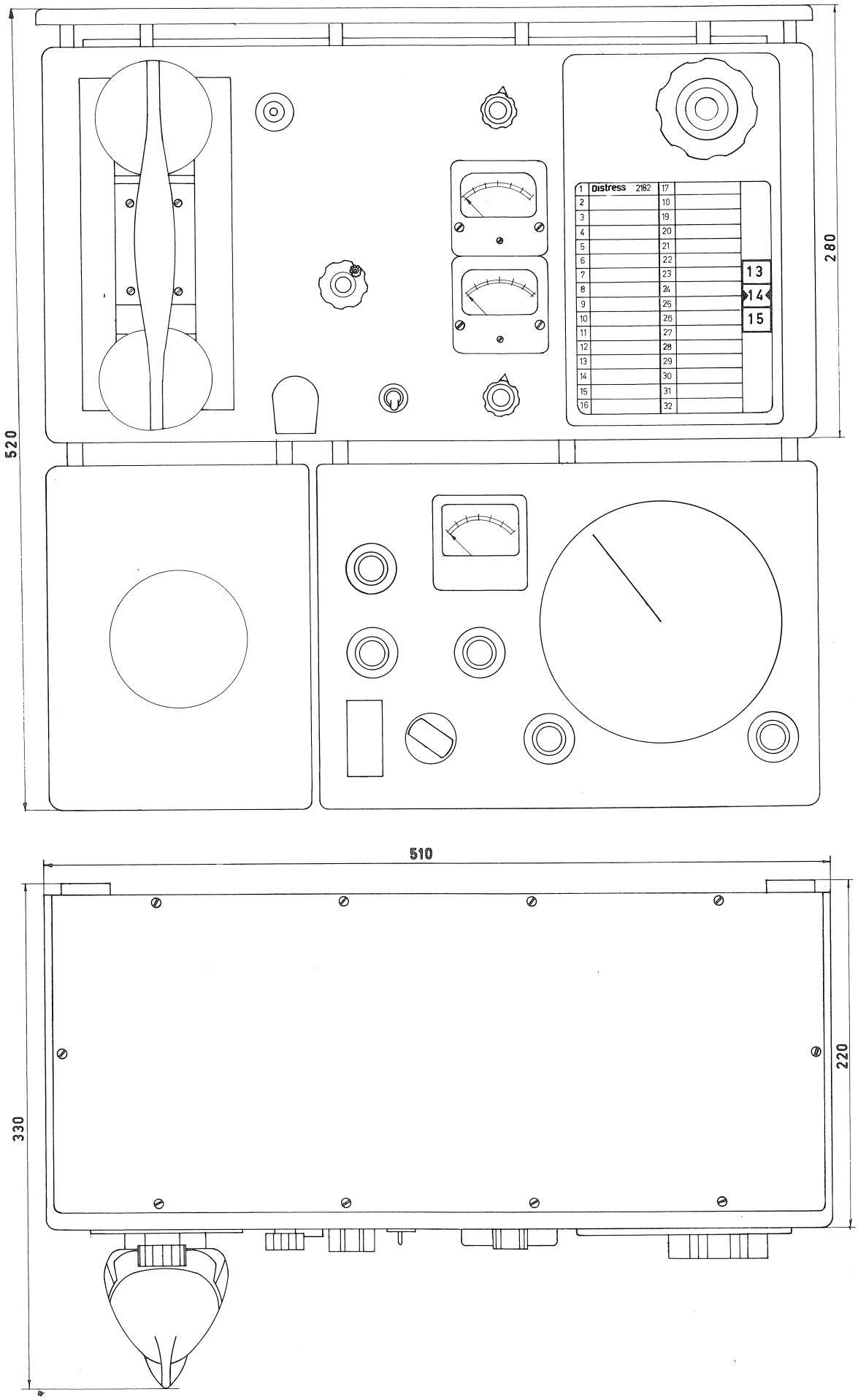

Fig. 14. Dimensionel Drawing